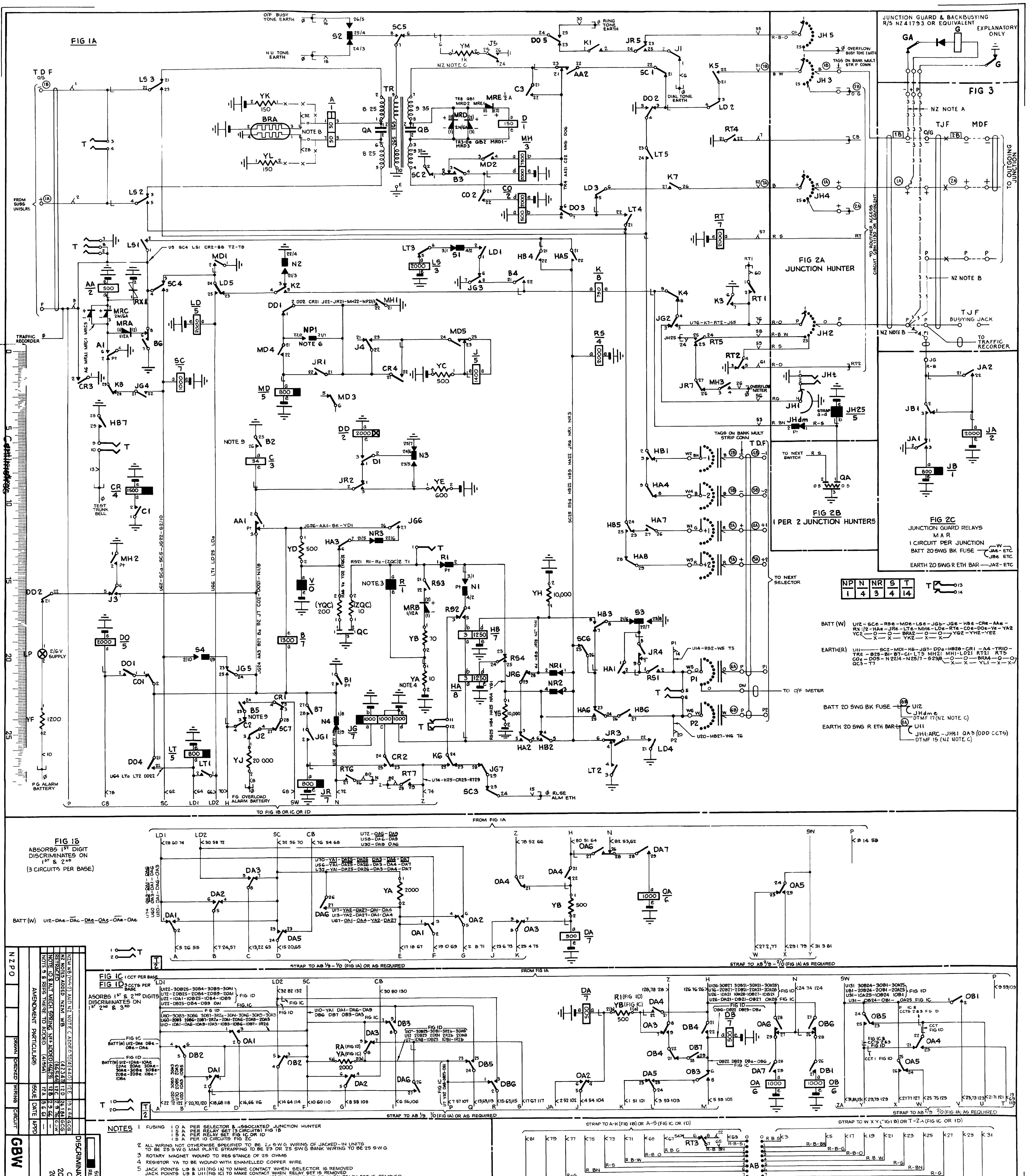

NOTES

1. FUSING 1 0 A PER SELECTOR & ASSOCIATED JUNCTION HUNTER
   1 5 A PER RELAY SET (3 CIRCUITS) FIG 1B
   1 5 A PER RELAY SET FIG 1C OR 1D
   1 5 A PER 10 CIRCUITS FIG 2C
2. ALL WIRING NOT OTHERWISE SPECIFIED TO BE 22 SWG WIRING OF JACKED-IN UNITS TO BE 25 SWG MAR PLATE STRAPPING TO BE 23 OR 25 SWG BANK WIRING TO BE 25 SWG
3. ROTARY MAGNET WOUND TO RESISTANCE OF 25 OHMS
4. RESISTOR YA TO BE WOUND WITH ENAMELLED COPPER WIRE
5. JACK POINTS U9 & U11 (FIG 1A) TO MAKE CONTACT WHEN SELECTOR IS REMOVED
   JACK POINTS U9 & U11 (FIG 1C) TO MAKE CONTACT WHEN RELAY SET IS REMOVED
   JACK POINTS U9 & U11 U14 & U16 U59 & U61 (FIG 1B) TO MAKE CONTACT WHEN RELAY SET IS REMOVED
   JACK POINTS U9 & U11 U59 & U61 U109 & U111 (FIG 1D) TO MAKE CONTACT WHEN RELAY SET IS REMOVED
6. NP PRINGS TO OPERATE ON LEVEL 0
7. Ø FOR WIRING SEE GBW 10650 OR EQUIV
8. FIG 1A WAS ORIGINALLY SUPPLIED WITH BARRETTER & CONNECTIONS SHOWN —O—O— CERTAIN DSRS HAVE SUBSEQUENTLY BEEN MODIFIED ON SITE BY THE SUBSTITUTION OF RESISTORS YK & YL AND CONNECTIONS SHOWN —X—X—
9. CONTACT B2 NOT OPEN BEFORE CONTACT B5 ON RELEASE
10. WHERE ALTERNATIVE MECHANICAL SPRING NOS ARE SHOWN eg 1/8 THE N S BEFORE AND AFTER THE OBLIQUE STROKE APPLY TO TYPE 2 AND TYPE 1 SPRINGSETS RESPECTIVELY N S WITHOUT ALTERNATIVES APPLY TO BOTH TYPES OF SPRINGSET

NZ NOTES -

A. WHEN JUNCTION GUARD CIRCUIT SPECIFIED USE R/S NZ41793 OR EQUIVALENT DELETE TDF CONNECTIONS SHOWN -- AND ADD CONNECTIONS SHOWN 3 3-3
B. WHEN 3 WIRE JUNCTION SPECIFIED REMOVE CONNECTION SHOWN 4 4-4- AND ADD CONNECTION SHOWN 5-5-5-
C. PROVIDE CONNECTION —6—6— AND RESISTOR WHEN USED WITH DTMF CONVERTERS REMOVE —X—X— PROVIDE SEPARATE BATT AND EARTH OF 0 5mm WIRE TO DTMF UNITS

AMENDMENT PARTICULARS	ISSUE	DATE	APPD
NZM WB (1552) AND NZ NOTE C ADDED TO (42440)	12E	19 4 84	GCG
NZ NOTES ADDED NZM WB (42347)	12D	26 1 84	GCG
RETRACED (86544)	12C	2 9 76	CJW
NOTE 10 & ALT MECH SPRING NOS ADDED (46623)	12B	2 9 66	—
NOTE 9 & REFS THERE TO ADDED (41954)	12A	8 6 61	—

NZPO | DRAWN | CHECKED | WIRING | CIRCUIT

DISCRIMINATING SELR REPEATER
COIN BOX
200 OUTLET
2000 TYPE

SIZE L | 50V

GBW 10430