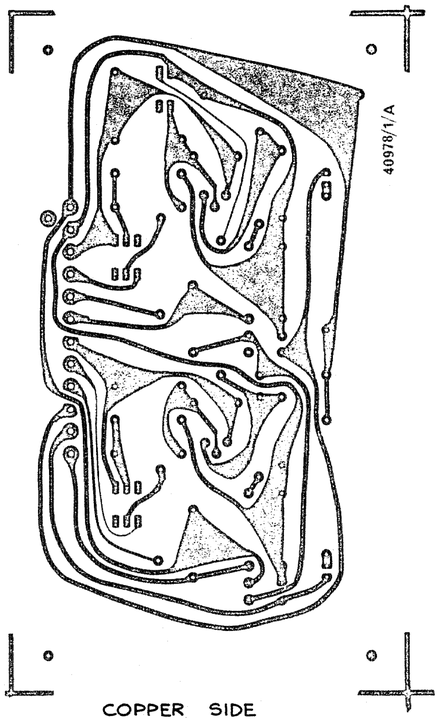

COPPER SIDE

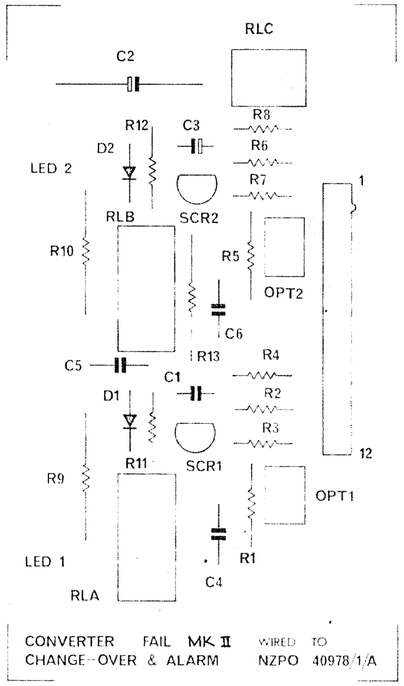

COMPONENT SIDE
(FULL SIZE)

PART	DESCRIPTION	VALUE	RATING	TOLERANCE	PART NUMBER	NOTES
R1, R5	RESISTORS					SEE NOTE 1 BELOW.
R2, R6	RESISTORS	18K	¼W	5%		
R3, R7	RESISTORS	10K	¼W	5%		
R4, R8	RESISTORS	1K	¼W	5%		
R9, R10	RESISTORS	2·7K	2W			
R11, R12	RESISTORS	680	1W	5%		
R13	RESISTOR	1·2K	¼W	5%		
C1	CAPACITOR	0·01	100V			METALISED POLYESTER
C2	CAPACITOR ELECTROLYTIC	33	100V			
C3	CAPACITOR ELECTROLYTIC	10	50V			
C4, C5, C6	CAPACITOR	0·1	100V			METALISED POLYESTER
D1, D2	DIODES				BAX 16	
LED1	YELLOW LED				MONSANTO MV5353	
LED2	RED LED				MONSANTO MV5055	
SCR1, SCR2	THYRISTORS				2N5062	
RLA, B	MINIATURE RELAY	740Ω			PYE 265/24/62V	TWO POLE CHANGE-OVER
RLC	MINIATURE RELAY				PYE MZ 24	ONE POLE CHANGE-OVER
OPT1, OPT2	INTEGRATED CIRCUITS				MONSANTO MCA 2-30	

COMPONENT LIST

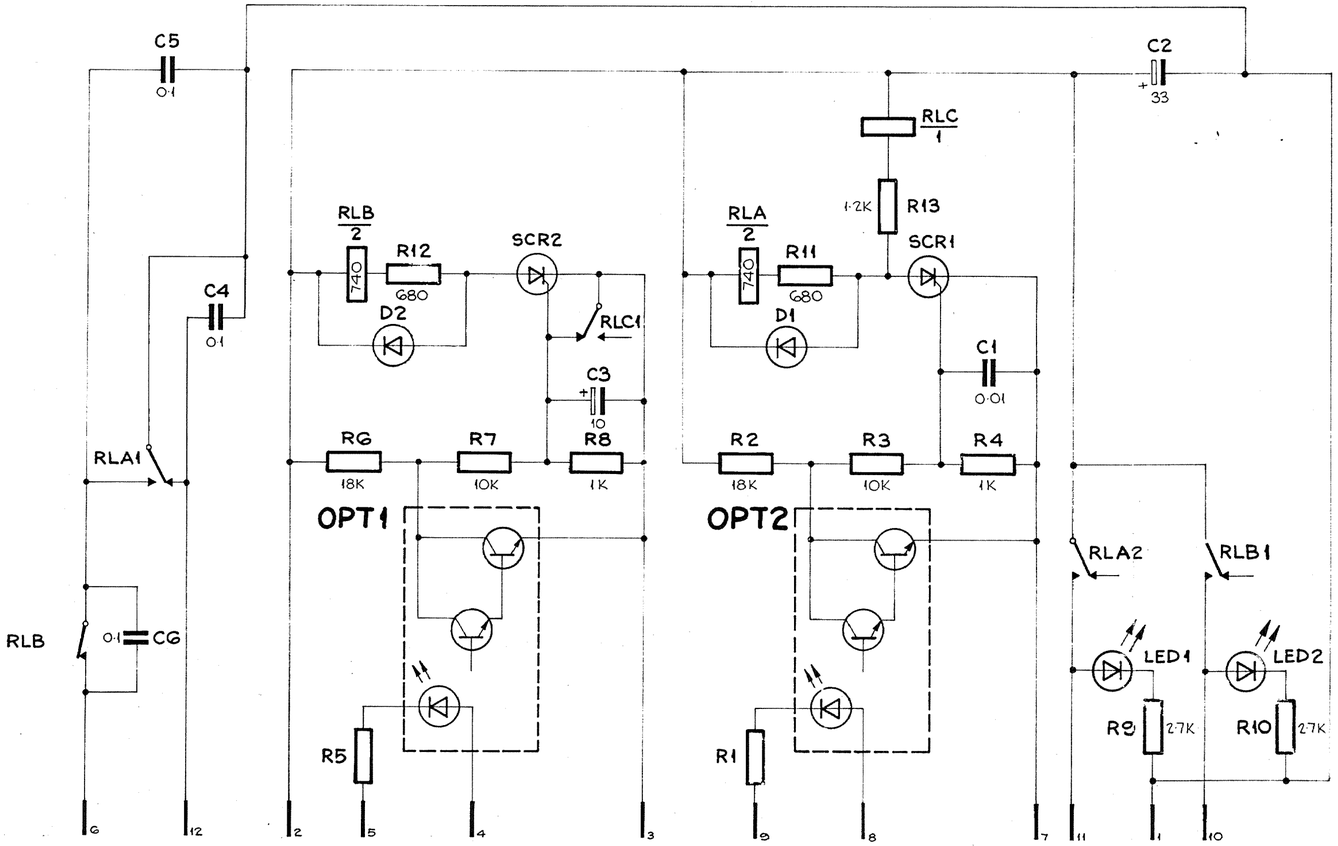

PC BOARD DRILLING:

ALL HOLES TO BE 1mm DIA. EXCEPT THE INDICATED HOLES AS SHOWN BELOW.

A - 1·2mm DIA
B - 0·8mm DIA
C - 3·0mm DIA
D - TO CLEAR M4 SCREW

NOTES:

1. THESE RESISTOR VALUES DEPEND UPON WHICH APPLICATION THE UNIT IS TO BE USED FOR:-

50V DC-DC CONVERTER	4·7 KΩ	1W	5%
130V DC-DC CONVERTER	18 KΩ	1W	5%
±80V DC-DC CONVERTER	15 KΩ	5W	5%

2. PRINTED CIRCUIT BOARD NEGATIVE AND SCREEN AVAILABLE FROM ELECTRICAL/MECHANICAL SECTION, E-IN-C, WELLINGTON.
3. PRINTED CIRCUIT BOARD TO BE MADE FROM 1·6mm THICK G10 FIBREGLASS, 70 MICRON COPPER SINGLE SIDED.
4. LED'S TO BE MOUNTED ON THE COPPER SIDE OF THE PC BOARD.

THIS DRAWING SUPERSEDES DRAWING 40363

CONVERTER FAIL CHANGE-OVER AND ALARM MK II

DEL	CKD	APD	ORDER	DATE	ISS	CHANGE
IBM	DN	GBC	155404	18 3 77	A	

N Z P O
ENGINEER-IN-CHIEF, WELLINGTON

COY Nº | ORIGIN: E-M
1 OF 1 | DRAWN: E-M | TRACED: T.B.M.
A2 | 40978