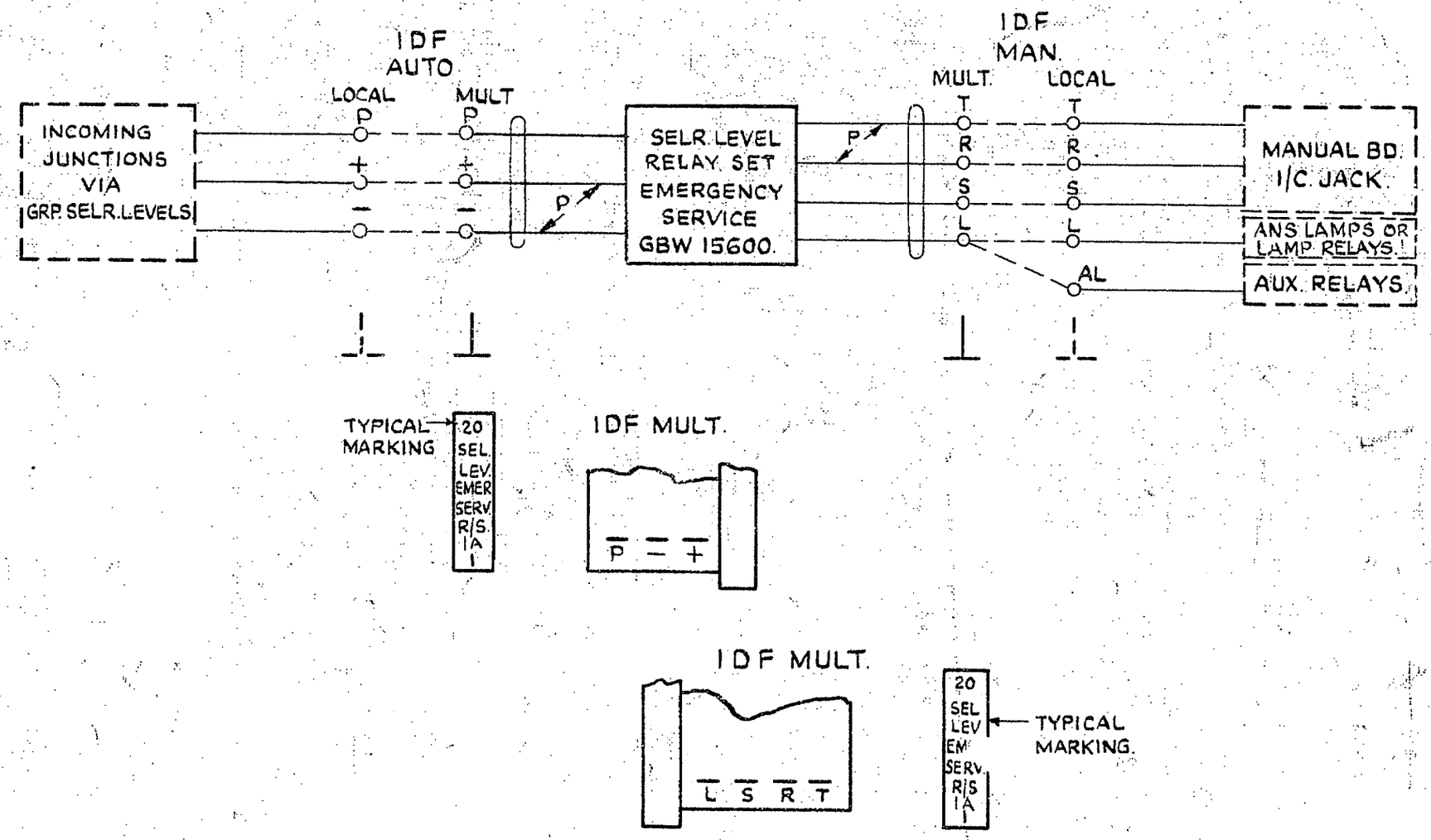

SELECTOR LEVEL RELAY SET.
EMERGENCY SERVICE.
I/C FROM UAX N.Z.13 OR AMX
W.E. TOLL BOARD.
(BRIDGE CONTROL.)

AMENDMENT PARTICULARS	ISSUE	DATE	APPD
(23155)	1	17.5.60	OK

N.Z.P.O.

DRAWN A.S.L. | CHECKED | APPROVED HAN | CHECKED

GBX 15600