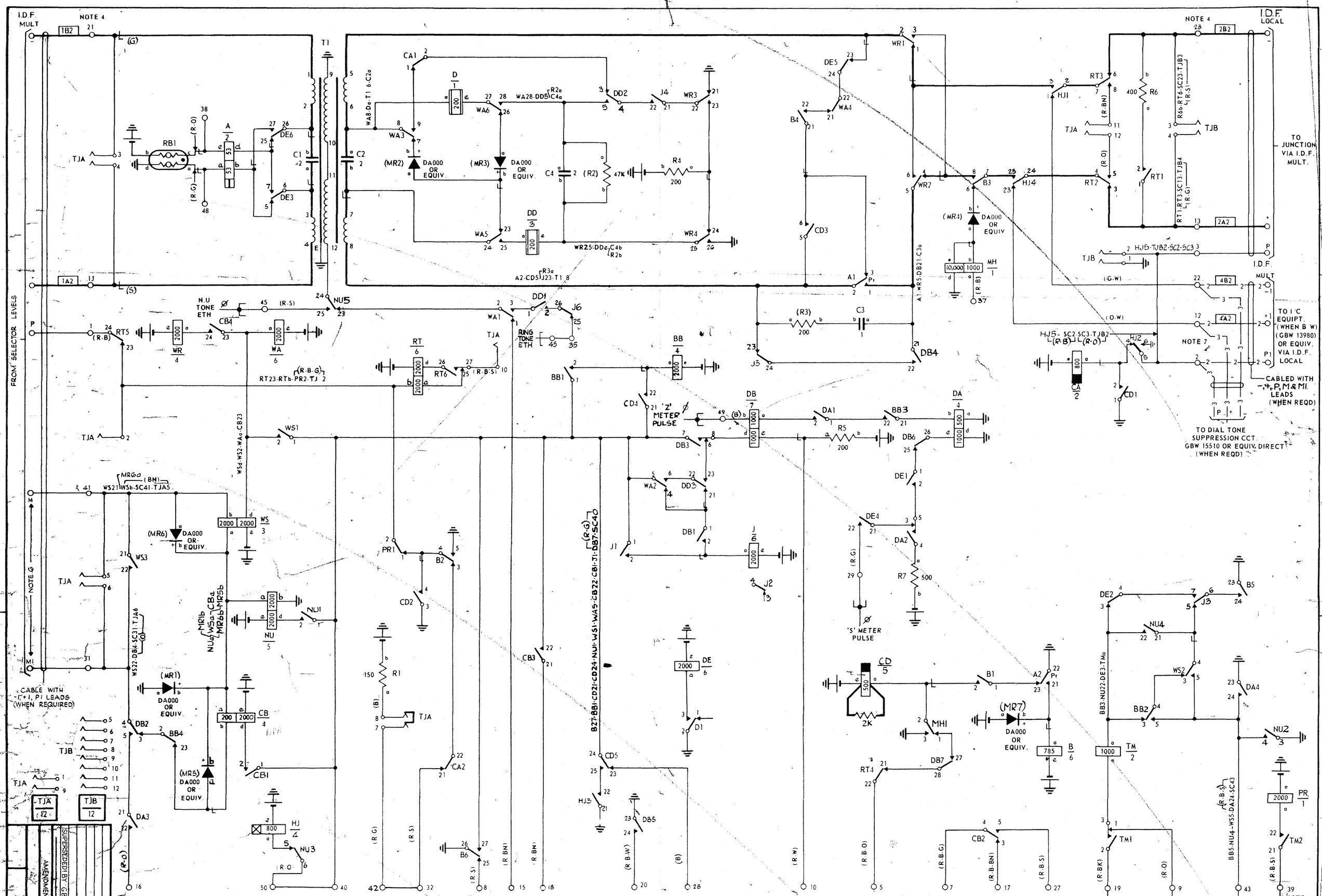

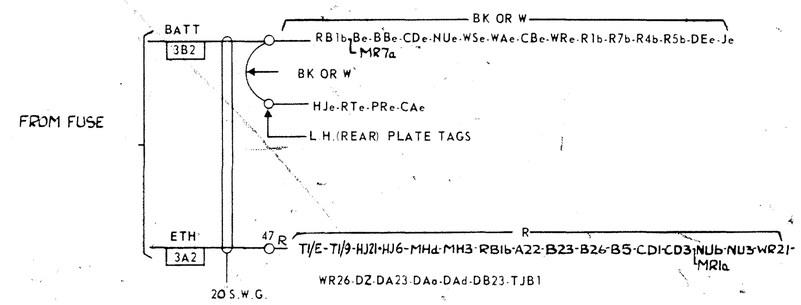

NOTES:

1. FUSE 1·0A PER CIRCUIT
2. ALL WIRING TO BE 25 SWG UNLESS OTHERWISE SPECIFIED
3. ⌀ FOR WIRING SEE GBW 13730 OR EQUIV.
4. UNLESS OTHERWISE SPECIFIED ALL TERMS ARE ON STRIP CONN AT REAR AND ARE DESIGNATED SC IN WIRING RUNS
5.
6. TAG 'M' IS CONNECTED TO THE JUNCTION LEVEL GIVING DIRECT ACCESS TO THE PARENT MANUAL EXCHANGE. TAG 'MI' IS CONNECTED TO THE SUBSCRIBER DIALLED JUNCTION LEVEL.
7. WHEN JUNCTIONS ARE B/W AND GBW15510 IS PROVIDED USE CABLING SHOWN THUS -3-3-3 OTHERWISE USE CABLING SHOWN -2-2-

MODA GIVES DETAILS OF INTERIM MODIFICATIONS (NZPO) PENDING FINALISATION WITH THE B.C.C. OF GBW 16671.

U.A.X. No. N.Z. 13
OUTGOING JUNCTION TERMINAL U.A.X. TO PARENT EXCHANGE

SUPERSEDED BY GBW 16671	B	22-8-69	
AMENDMENT PARTICULARS	ISS	DATE	APPD

DRAWN EE | CHKD | WIRING | CIRCUIT

REF: GBW 16670

GBW 16671 MOD A