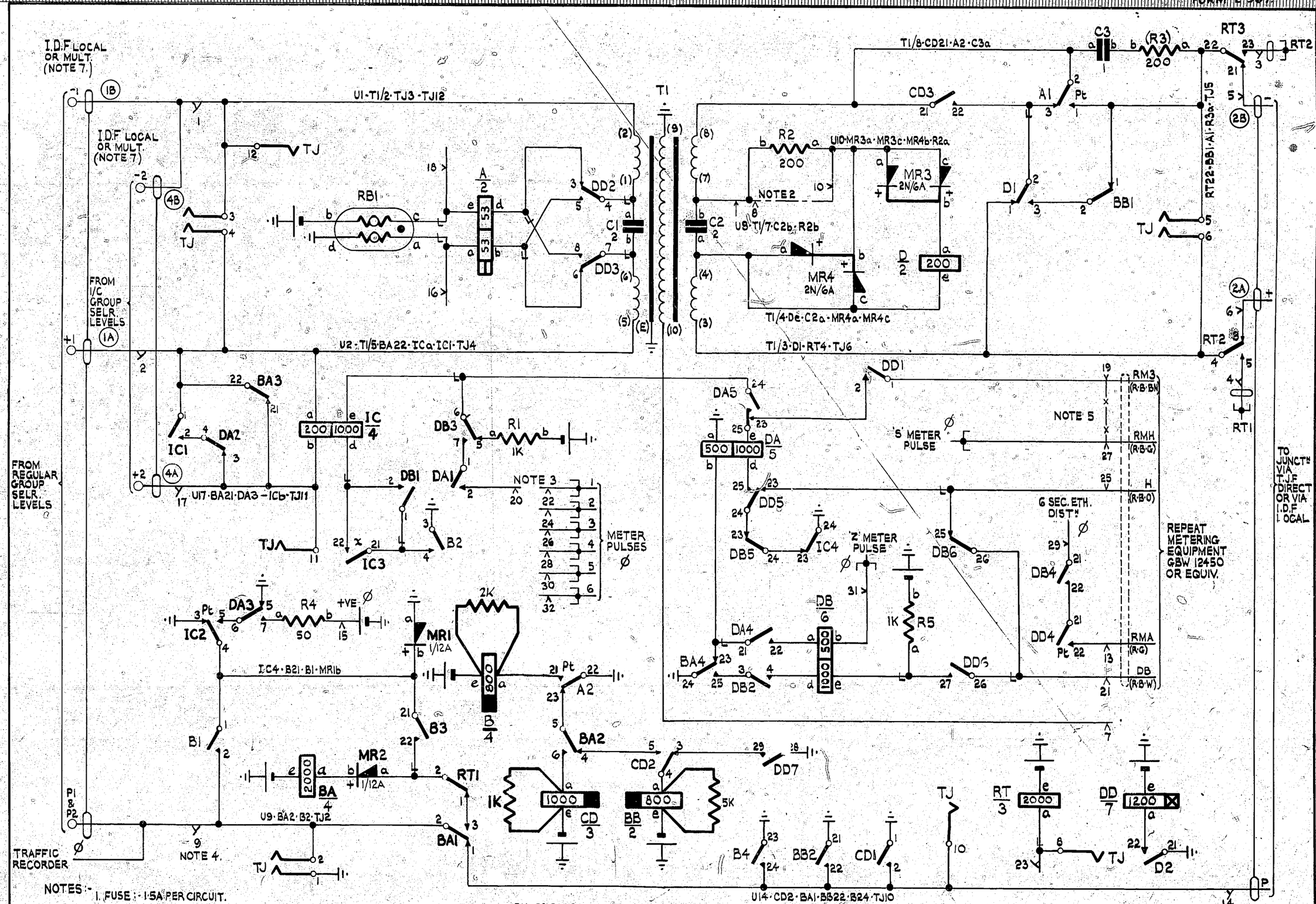

NOTES :-

1. FUSE :- 1·5A PER CIRCUIT.
2. STRAP BETWEEN U8 & U10 TO BE REMOVED WHEN THE JUNCTION RESISTANCE IS LESS THAN 200Ω.
3. CONNECT U20 TO APPROPRIATE METER PULSE.
4. SHELF JACK 'U' POINTS 9 & 11 TO MAKE CONTACT WHEN RELAY SET IS REMOVED.
5. ADD STRAP U19-U27 WHEN REPEAT METERING IS NOT REQUIRED
6. Ø FOR WIRING SEE GBW 10640 OR EQUIVALENT.
7. THESE LEADS ARE CABLED TO THE I.D.F EXCEPT UNDER FULL AVAILABILITY CONDITIONS WHEN THE TERMINALS ON THE I.D.F ARE REPLACED BY TERMINALS ON THE GRP. SELR. BANK MULT. STRIP WHERE THERE ARE SEPARATE P1 & P2 TERMINALS & 6 WIRE CIRCUITS ARE CABLED DIRECT.
8. UNLESS OTHERWISE SPECIFIED ALL WIRING TO BE 25 S.W.G.

7 — 9 — 13 — 14 — TJ/14

BATT. FUSE BK. 22 S.W.G (3B) U12

ETH BAR ETH R. 22 S.W.G (3A) U11

BATT. W :- U12-CDe-BAe-RTe-DDe-BBe-Be-R1b-RB1b-R5b

ETH. R :- U11-T1/9-T1/E-CD1-BA24-DAa-DA5 D21-IC24-IC3-DD28-BB21-B23-B3-A22-MR1a-RB1d-TJ1

POS. BATT. R.B :- U15-R4b

AMENDMENT PARTICULARS	ISSUE	DATE	APPD
WIRING FROM U7 DELETED. (55922)	2	22·5·62	K.G.H.

AUTO TO AUTO RELAY SET
FIXED FEE
WITH REPEAT METERING

NZPO | DRAWN | CHECKED | WIRING | CIRCUIT | REF. | SIZE S | 50Y | H

GBW 15770