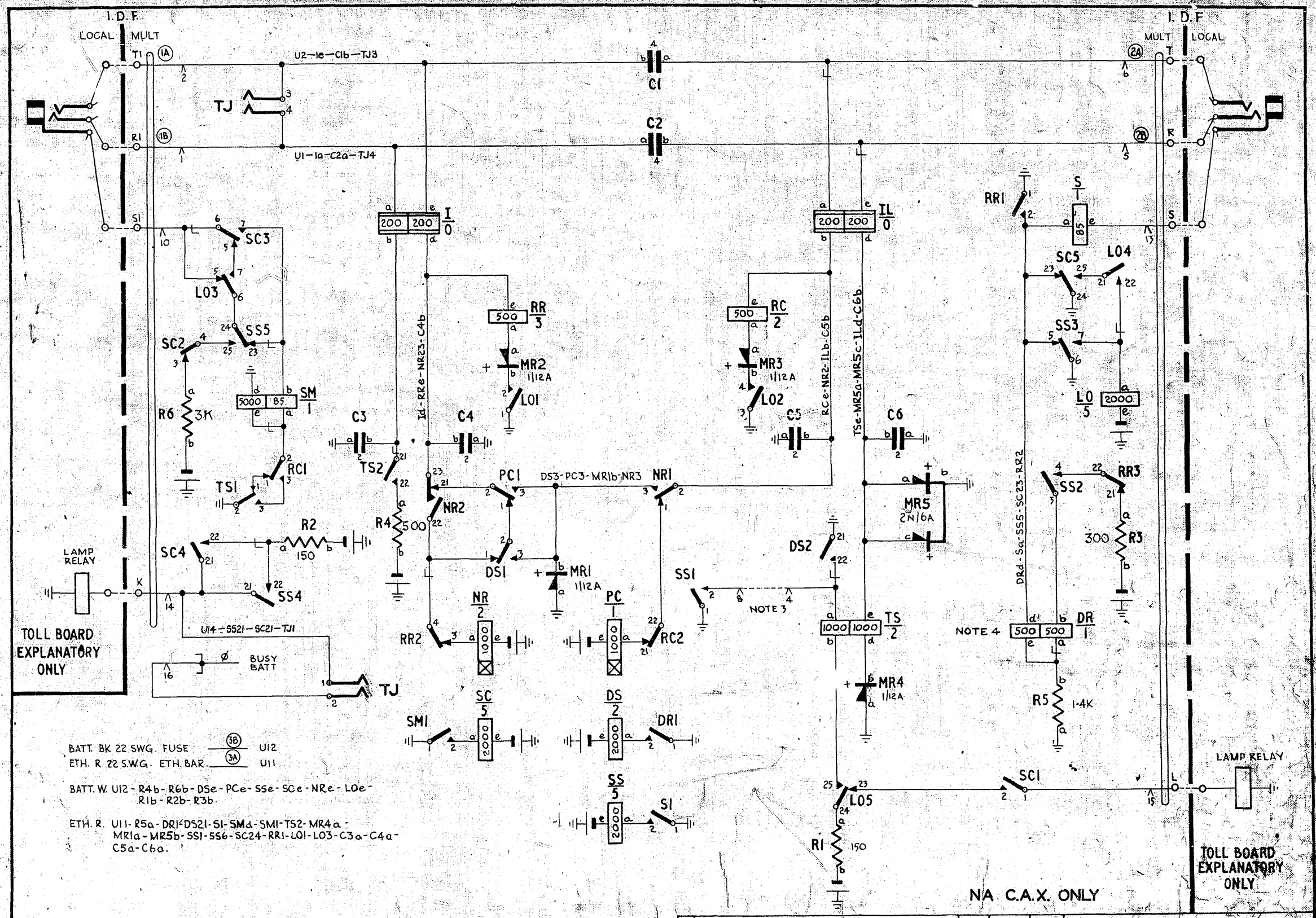

NOTES.

1. FUSING:- 1·5A PER CIRCUIT.
2. IN ADDITION TO JACK POINTS 9 & 11, POINTS 14 & 16 ALSO MAKE WHEN RELAY SET IS REMOVED.
3. DELETE STRAP BETWEEN SHELF JACK U POINTS 4 AND 8 WHEN THROUGH SIGNALLING IS REQUIRED.
4. RELAY DR IS DIFFERENTIALLY CONNECTED.
5. ALL WIRING TO BE 25 S.W.G. UNLESS OTHERWISE SPECD
6. Ø FOR WIRING SEE GBW 10640 OR EQUIVALENT.

AMENDMENT PARTICULARS	ISSUE	DATE	APPD
MOD. VERSION PREPARED (81361)	A	26.7.57	A.B.
(23111)	1	5.5.60	JK.

SLEEVE CONTROL SYSTEM
DELAY TRANSFER CIRCUIT

SIZE S 150V S

GBW 13110 MO A

N.Z.P.O.

DRAWN	TRACED	CHECKED	APPROVED
E.A.M.	J.H.		

COPY TRACING No. 6R (T.U. TYPE)