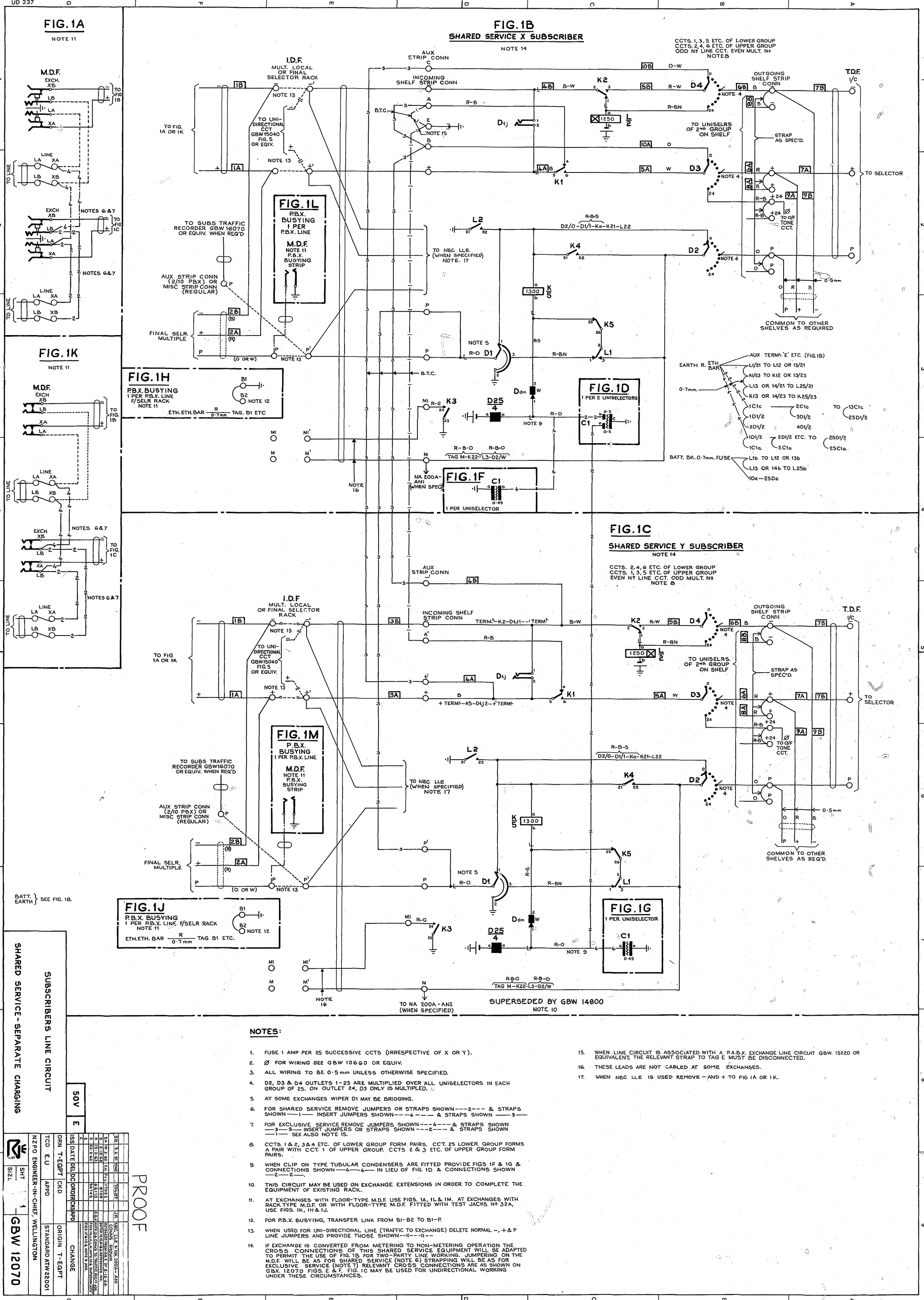

NOTES:

1. FUSE 1 AMP PER 25 SUCCESSIVE CCTS (IRRESPECTIVE OF X OR Y).
2. Ø FOR WIRING SEE GBW 10660 OR EQUIV.
3. ALL WIRING TO BE 0·5 mm UNLESS OTHERWISE SPECIFIED.
4. D2, D3 & D4 OUTLETS 1-23 ARE MULTIPLIED OVER ALL UNISELECTORS IN EACH GROUP OF 25. ON OUTLET 24, D3 ONLY IS MULTIPLED.
5. AT SOME EXCHANGES WIPER D1 MAY BE BRIDGING.
6. FOR SHARED SERVICE REMOVE JUMPERS OR STRAPS SHOWN---2--- & STRAPS SHOWN —1— INSERT JUMPERS SHOWN---4--- & STRAPS SHOWN —3—
7. FOR EXCLUSIVE SERVICE REMOVE JUMPERS SHOWN---4--- & STRAPS SHOWN —3—3— INSERT JUMPERS OR STRAPS SHOWN---2--- & STRAPS SHOWN —1— SEE ALSO NOTE 15.
8. CCTS. 1 & 2, 3 & 4 ETC. OF LOWER GROUP FORM PAIRS. CCT. 25 LOWER GROUP FORMS A PAIR WITH CCT. 1 OF UPPER GROUP. CCTS 2 & 3 ETC. OF UPPER GROUP FORM PAIRS.
9. WHEN CLIP ON TYPE TUBULAR CONDENSERS ARE FITTED PROVIDE FIGS 1F & 1G & CONNECTIONS SHOWN —4—4— IN LIEU OF FIG. 1D & CONNECTIONS SHOWN —2—2—.
10. THIS CIRCUIT MAY BE USED ON EXCHANGE EXTENSIONS IN ORDER TO COMPLETE THE EQUIPMENT OF EXISTING RACK.
11. AT EXCHANGES WITH FLOOR-TYPE M.D.F. USE FIGS. 1A, 1L & 1M. AT EXCHANGES WITH RACK TYPE M.D.F. OR WITH FLOOR-TYPE M.D.F. FITTED WITH TEST JACKS Nº 32A, USE FIGS. 1K, 1H & 1J.
12. FOR P.B.X. BUSYING, TRANSFER LINK FROM B1-B2 TO B1-P.
13. WHEN USED FOR UNI-DIRECTIONAL LINE (TRAFFIC TO EXCHANGE) DELETE NORMAL –, + & P LINE JUMPERS AND PROVIDE THOSE SHOWN--II---II--
14. IF EXCHANGE IS CONVERTED FROM METERING TO NON-METERING OPERATION THE CROSS CONNECTIONS OF THIS SHARED SERVICE EQUIPMENT WILL BE ADAPTED TO PERMIT THE USE OF FIG. 1B FOR TWO-PARTY LINE WORKING. JUMPERING ON THE M.D.F. WILL BE AS FOR SHARED SERVICE (NOTE 6) STRAPPING WILL BE AS FOR EXCLUSIVE SERVICE (NOTE 7) RELEVANT CROSS CONNECTIONS ARE AS SHOWN ON GBX. 12070 FIGS. E & F. FIG. 1C MAY BE USED FOR UNDIRECTIONAL WORKING UNDER THESE CIRCUMSTANCES.
15. WHEN LINE CIRCUIT IS ASSOCIATED WITH A P.A.B.X. EXCHANGE LINE CIRCUIT GBW. 15220 OR EQUIVALENT, THE RELEVANT STRAP TO TAG E MUST BE DISCONNECTED.
16. THESE LEADS ARE NOT CABLED AT SOME EXCHANGES.
17. WHEN NEC LLE IS USED REMOVE – AND + TO FIG 1A OR 1K.

SUBSCRIBERS LINE CIRCUIT
SHARED SERVICE - SEPARATE CHARGING

50V E

ISS	DATE	DEL	DC	ORDER	CK	APD	CHANGE
A							
2							
3	23-2-62			56749			FIGS. 1F & 1G & NOTE 9 ADD.
4	13-2-63			66110			D.B.H. NOTES 13 & CONNS TO TRAFFIC REC'R ADD. FIGS. 1H, J, L, M. NOTE 10 & SUPERSN. NOTE
5	8-12-66			6706			NOTES 14, 15, & 16 & REFERENCES ADD.
5A	19-1-80		E.U.	FVL 17023			RETRACED FROM ISS 5 OF B-12-66.
BB	3.4.81		PMW	–	70L-89		JR. NEC LLE & NA 200A-ANI CONNS SHOWN

DRN T-EQPT CKD ORIGIN T-EQPT
TCD E.U APPD STANDARD ATW 22001
NZPO ENGINEER-IN-CHIEF, WELLINGTON
SHT 1 SIZE GBW 12070

PROOF