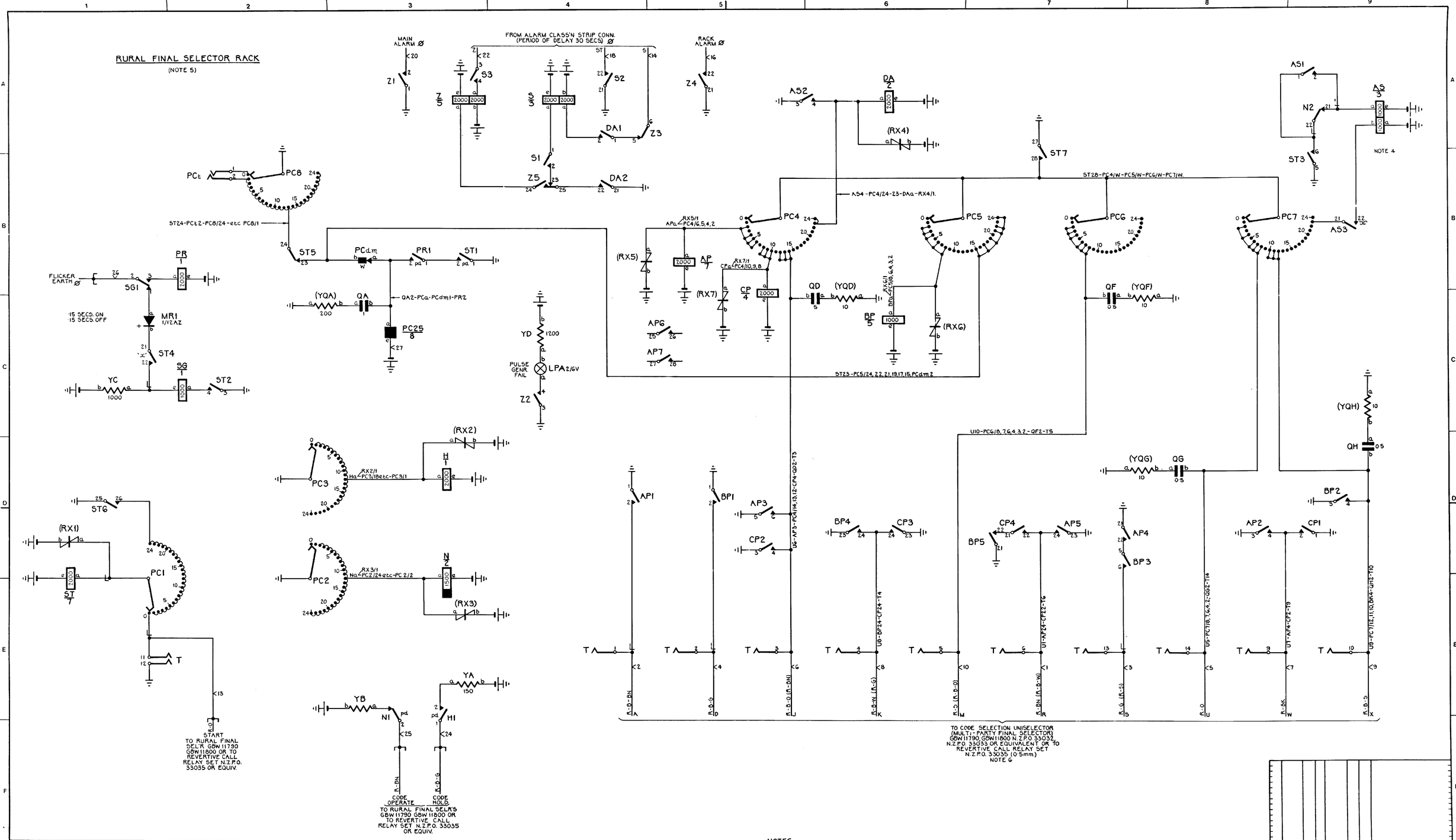

CODE	PULSES
A	
D	
J	
K	
M	
R	
S	
U	
W	
X	
TIMING M/S	300, 300, 300, 300, 300, 300, 300, 300, 300, 300, 300, 300, 300, 300, 300,

3·9 SEC — 1·8 SEC

1 CYCLE = 5·7 SECONDS

BATT. BK. FUSE 1B U27 U12

ETH. R. ETH. BAR 1A U11

BATT. W. U12-ASa-ASe-He-APe-Ne-PRe-Zb-Ze-Sb-Se-STe RX2/2 RX5/2 RX3/2 RX1/2

DAe-DPe-CPe-YAZ-YB2-YC2-YD2 RX4/2 RX6/2 RX7/2

ETH. R. U11-AS3-AP21-AP23-AP1-AP3-AP6-ZZ1-Z1-Z3
BC2/W-PC3/W-PC8/W-YQA1-SZ1-ST25-ST27-ST
ST3-ST5-DA21-DP23-BP21-BP1-BP3-CP23-CP
CP3-YQD1-YQF1-YQG1-YQH1-T1Z

NOTES.

1. FUSING 1·5A PER CIRCUIT.
2. ØFOR WIRING SEE MISC. CCT. GBW 10680 OR EQUIV.
3. WIRING INTERNAL TO RELAY SET TO BE 0·5mm. OTHER WIRING TO BE 0·7mm UNLESS OTHERWISE SPECIFIED.
4. WDGS. OF RELAY AS CONNECTED IN OPPOSITION.
5. THIS CIRCUIT IS EQUIPPED 1 PER RURAL FINAL SELR. RACK. 1 UNWIRED POSITION IS PROVIDED PER RACK & 1 SPARE RELAY SET IS PROVIDED PER EXCHANGE.
6. WHEN THIS CIRCUIT IS USED IN CONJUNCTION WITH EQUIPMENT MODIFIED FOR FULL 'M' WORKING THE ALTERNATIVE WIRE COLOURS SHOWN IN BRACKETS ARE TO APPLY.

PROOF

SLOW RELEASE | SLOW OPERATE | 50V | 5

PULSE GENERATOR RELAY SET
FOR CODE RINGING
2000 TYPE

ISS	DATE	DEL	DC	ORDER	CKD	APD	CHANGE
A	16·9·80	N.S.		11162			RETRACED & METRICATED
5	28·9·66			64118			NOTE 6 AND ALT WIRE COLOURS ADD
4							RCT MR1 ADD RLSE ALM BATT DEL
3							REDRAWN, CIRCUIT MODIFIED
2	15·7·53			7910			COLOURS ON PULSE LEADS TRANS
1		J.W.					RX5,6,7 ADDED QB QC QL DELETED

DRN: T-EQPT | CKD | ORIGIN: T-EQPT
TCD: N.S. | APPD | STANDARD: ATW 22001
NZPO ENGINEER-IN-CHIEF, WELLINGTON
SHT 1 OF 1 | SIZE A1 | GBW 11930