TO RACK MISC STRIP CONN. Ø

3 MIN ST · 3 MIN S · 3 MIN Z

AE TC1/3 (U) B22 · TA8 · TA6 · TA7

R-S · BN · BN-W

ST TB28 · S TB26 · Z TB27

0·7 mm · 1A · 1B

AL TC1/4 R-O C21 (V)

TF TC1/2 R-B CF1 22 21

TS TC1/1 R-B TR 6 2000

TR5 23 24

TO ACC. CONTUNIT (NOTE 2)

RF1 TC1/13 · RF2 TC1/14 · BTC. 0·7MM

(R1) 200 · C1 1

R-S To C1b-TG28-AE6

RA TB24 G27 (T)

RB TB25 R-BK 0·7 MM

SR TC1/5 R-B TU2-TC1/5-TG8-TG10

D51 TC1/9

TS6 21 22 R-BK DE4-RT1-PB1-PX23-PH1-TS22-KBT2

FIG. 3

NOTE 6.

BI3 · R-BW 0·7 MM · TB33

Ø POSITIVE BATT. GENERATOR START

TS4 · 6B B-W · TR2 · 6A B · TS 6 2000 2000 · TS8 25 26

TR1 · R-G · Ttj · T1 · Tdm W

TS27-T1/8 TO TU25-T1/2 R-BN

TS1 27 26 · AE2 6

R-S To C1b-TG28-AE6

(R1) 200 · C1 1 · T25 8

PE1 3 2 R-G · PH1 2 1

PF2 21 22 · LT5 22 21 · NL2 22 21 (R-G) · PL2 28 27 R-B · AO1 1 (R-B-W)

NL3 24 23 (R-BN) · PL3

R-O · R-B · B45-68S-NL2-T3/4 · R-B

PX1 2 1 · R-O D5b-PF22-PX1-PL24-LT2?

R-B 22-T3/7-14-19-24 · Z1 2 1 · DE2 4 3 R-O

SZ1 (R-BN) · RT1 2 1

SS2 4 3 (R-B) · SZ2 22 21 R-G · PX4 24 23

PB1 R-O 2 1

BA4 R-B-G 4 5 · WH3 21 22

LI3 R-B-O 2 1 · WF1 21 22

BB4 R-G 4 29 · WG1 26 · (R-G)

R-B-O

KBT2 1 2 3

R-O · R-G · TU1 3 2 R-BN

R-B-G 27 26 WG1

IR1 Pt R-B · IQ1 Pt (R-O)

B1 (R-B) · A1 1000 (R-G)

DS 3 4 1500 · B 1 1000 (R-B-S)

TR6 (R-B) · DS2 (R-O)

TD2 3 · BI2 4 22 21 R-O · R-B

R-G · R3 250 R-B 0·7MM · TA17

R2 300 R-B

TU 2 500 · TU2 21 22

TG6 · AR 1 3 2 1 · TR1 · MR1 1/12A · TR2 · TG4 · A11 (A)

C2 2 · C1 0·5

TG1 · R2Ab · C1b-TR1/R

TG3 · B11 (B)

V1 KT33C

TG20 0·7MM RED ETH. FOR SCREENED WIRES

TG3 · AR1

TG10

TG8 · R1 15 · R2C 25 · R2B 20 · R2A 20

FIG. 2

VALVE PANEL

R-BN DU21-AE22-TG/1-PGd-PFd-PEa · D13 (G)

AE5 22 · DV3 21 22 (R-B-O) · DU1 21

R-G

PX 6 1000 1000

R-BN TG/G-PY4-PW22-PX3 · PY1 3 4 5

R-B-G · R-B-W D11 (D) · R-B-S

PW1 22 21

PY4 R-O 24 23

PX2 3 4

TS7 23 24 R-B-W T524-TG/W-PH21-PE21 · TG

R-G PX6 PY23 PY7 TG/10 TO 13-15 TO 18-20 TO 23

PW 2 2000

PH3 21 · PE4 22 · R-B-O

PH 4 2000 · (R-BN) · PF1 2 · PG1 1 (R-S)

PY 6 1000 1000 · R-B-BN

PX3 21 22 R-B-W · PY2 6 7 (R-B)

Z2 22 21 · PY6 20 27 25 R-O D11 (C)

Z 3 2000 · PZ2 1 R-G · R-BN H2 6 5 R-B-O

R-S H21-Z21-PX21-PY26-PZ4-T6/7-14-19-24

PZ3 22 21

DE1 2 1 R-BN · H4 22 21

1000 · H3 9 8 R-B · PZ1 3 5 R-O · R-BK

P2 3 500

DE 3

R21 800 · R-B-W

LP30 6/6V · A23 (W) PRIV. GUARD FAIL

PX5 5 7

PROOF

LC 2 1500 · LA5 R-B 24 23 · LC1 22 21 · R-BN · BA1 1

BA5 23 24 · BA 5 1000 · R-BN · LA3

BB5 23 24 · BB 5 1000 · R-BK · LB3

DR 4 800 · R-B · LT4

IQ 1 1000 · (R-O) · IP1 3 1 2 (R-B) DS3 22 21 · R-O · IR 1 1000

WH 3 1000 1000 · (R-B-O) · (R-B-O)

WH1 · WF6 · WG6 · WH2

BA3 · R-S · BB3

FOR NOTES SEE SHT. 3
N.Z. NOTES SEE SHT. 2

SLOW RELEASE · SLOW OPERATE · 50 V · S

ISS	DATE	DEL	DC	ORDER	CKD	APD	CHANGE
5E	27-10-83	G.U.	AJB	38436	AJC	GCG	REPLACEMENT OF R2 & TU COIL
5E	22-5-80	E.U.		18630 JB			RETRACED FROM CGY 154-50 8-12-78
1			F.L.W.	19357S	KJC	K.E.D.	

DRN: T-EQPT · CKD: · ORIGIN: T-EQPT

TCD: E.U. · APPD: · STANDARD: ATW22001

N.Z. ENG: · IN-CHIEF, WELLINGTON

SHT 1 OF 3 · SIZE A1 · GBW 11221

ROUTINER FOR GROUP SELRS
WITHOUT BUSY FLASH
TEST UNIT
2000 TYPE

UD 237

0 5 Centimetres 10 15 20 25 30 35 40 45 50 55 60

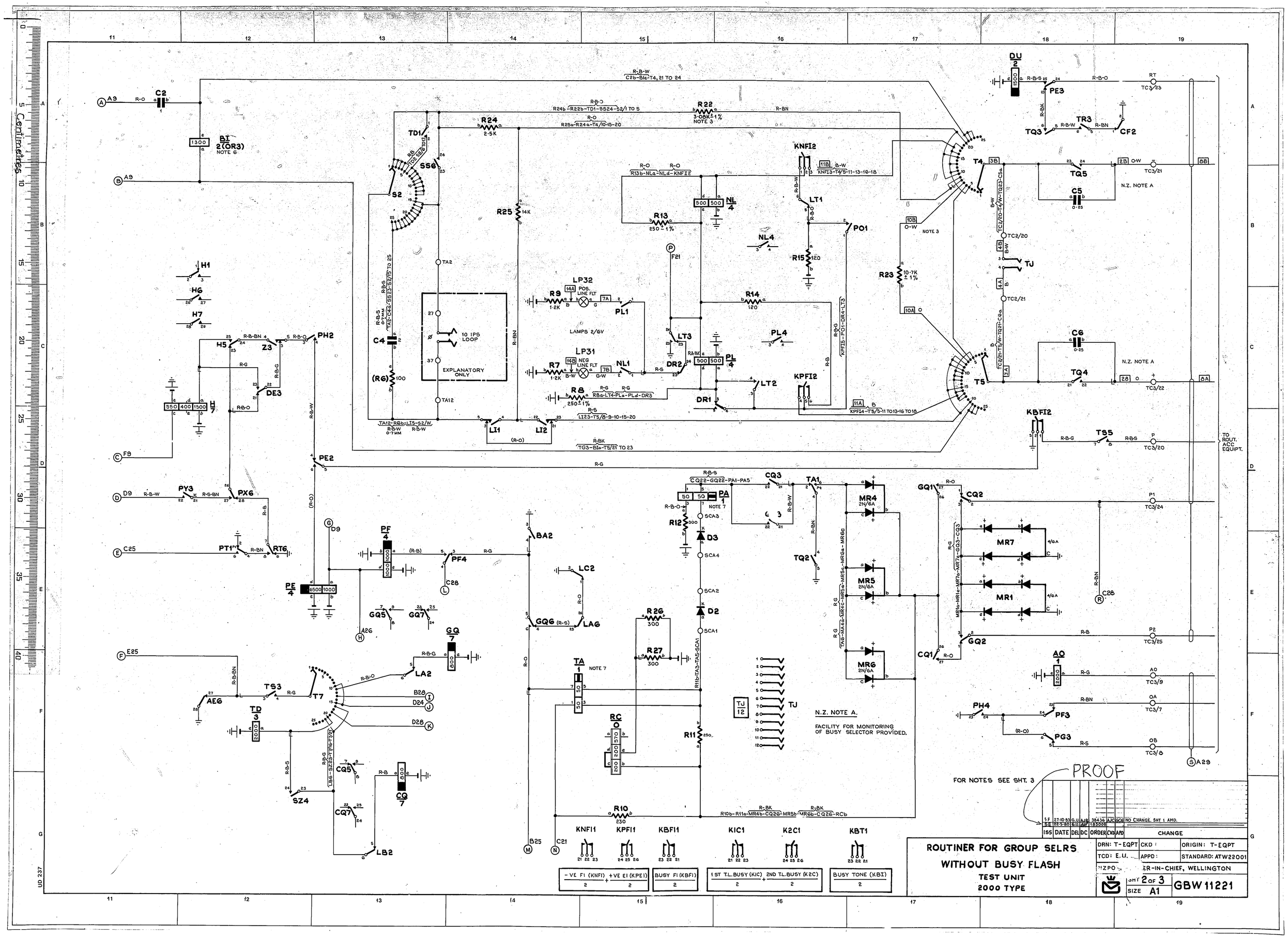

ROUTINER FOR GROUP SELRS
WITHOUT BUSY FLASH
TEST UNIT
2000 TYPE
PROOF
FOR NOTES SEE SHT. 3
N.Z. NOTE A.
FACILITY FOR MONITORING OF BUSY SELECTOR PROVIDED.
EXPLANATORY ONLY
10 IPS LOOP
LAMPS 2/6V
TO ROUT. ACC EQUIPT.
KNFI1
KPFI1
KBFI1
KIC1
K2C1
KBT1
-VE FI (KNFI) / 2 + +VE EI (KPEI) / 2
BUSY FI (KBFI) / 2
1ST T.L. BUSY (KIC) / 2 + 2ND T.L. BUSY (K2C) / 2
BUSY TONE (KBI) / 2
ISS DATE DEL DC ORDER CKD APD CHANGE
5F 27-10-83 G.U. AJB 38436 AJC GCG NO CHANGE. SHT 1 AMD.
5E 22-5-80 G.U. AJB 183008
DRN: T-EQPT
CKD:
ORIGIN: T-EQPT
TCD: E.U.
APPD:
STANDARD: ATW22001
NZPO ... ER-IN-CHIEF, WELLINGTON
SHT 2 OF 3
SIZE A1
GBW 11221
UD 237

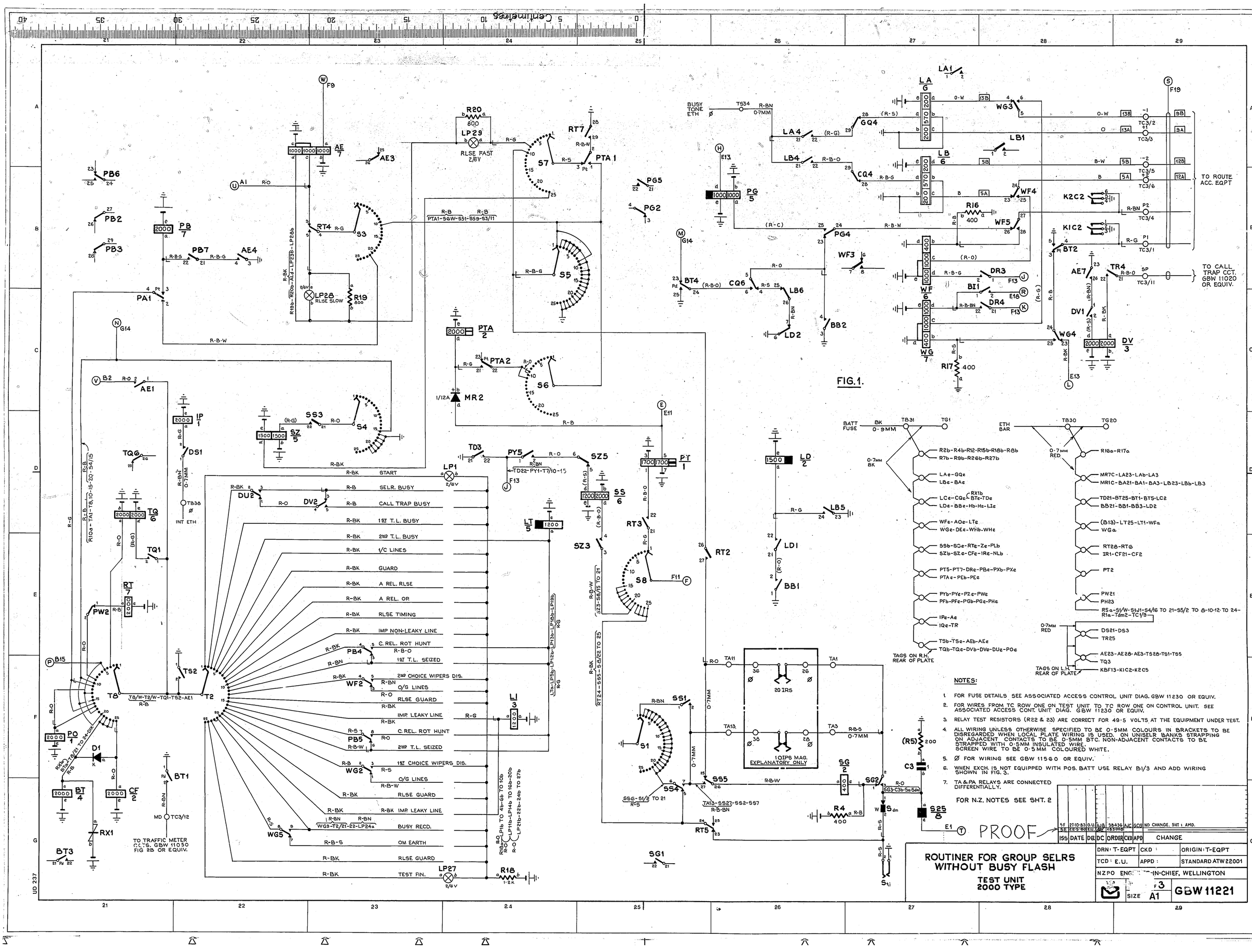
PB6
PB2
PB3
PB7
AE4
PA1
AE1
TQ6
DS1
TQ6
TQ
TQ1
RT
PW2
PO
D1
BT
CF
RX1
BT3
BT1
TO TRAFFIC METER CCTS. GBW 11050 FIG 2B OR EQUIV.
TS2
T8
T2
TS/W-T2/W-TQ1-TS2-AE1
AE
AE3
RT4
S3
LP28
RLSE SLOW
R19
R20
LP29
RLSE FAST
2/6V
RT7
S7
PTA 1
PG5
PG2
R-B PTA1-SGW-S51-S59-S3/11
PTA
PTA2
S6
MR2
SZ
SS3
S4
TD3
PY5
SZ5
SS
PT
LT
LI
SZ3
S8
F11
RT3
RT2
LP1
LP27
R18
DU2
DV2
PB4
WF2
PB5
WG2
WG5
SELR. BUSY
CALL TRAP BUSY
1ST T.L. BUSY
2ND T.L. BUSY
I/C LINES
GUARD
A REL. RLSE
A REL. OR
RLSE TIMING
IMP NON-LEAKY LINE
C. REL. ROT HUNT
1ST T.L. SEIZED
2ND CHOICE WIPERS DIS.
O/G LINES
RLSE GUARD
IMP. LEAKY LINE
C. REL. ROT HUNT
2ND T.L. SEIZED
1ST CHOICE WIPERS DIS.
O/G LINES
RLSE GUARD
IMP. LEAKY LINE
BUSY RECD.
OM EARTH
RLSE GUARD
TEST FIN.
START
BUSY TONE ETH
LA
LB
WG3
WF4
WF5
WF3
PG4
LB1
LA1
LA4
GQ4
LB4
CQ4
R16
R17
K2C2
K1C2
BT2
TR4
DV1
DV
WG4
DR3
DR4
BI1
WF
WG
BB2
LB6
LD2
CQ6
BT4
TO ROUTE ACC. EQPT
TO CALL TRAP CCT. GBW 11020 OR EQUIV.
FIG. 1.
BATT FUSE
ETH BAR
TAGS ON R.H. REAR OF PLATE
TAGS ON L.H. REAR OF PLATE
20 IRS
10 IPS MAG. EXPLANATORY ONLY
SS1
S1
SS5
SS4
SG2
SG
R4
R5
C3
S25
S dm
S ti
LD
LD2
LD1
BB1
RT5
SG1
NOTES:
1. FOR FUSE DETAILS SEE ASSOCIATED ACCESS CONTROL UNIT DIAG. GBW 11230 OR EQUIV.
2. FOR WIRES FROM TC ROW ONE ON TEST UNIT TO TC ROW ONE ON CONTROL UNIT. SEE ASSOCIATED ACCESS CONT. UNIT DIAG. GBW 11230 OR EQUIV.
3. RELAY TEST RESISTORS (R22 & 23) ARE CORRECT FOR 49·5 VOLTS AT THE EQUIPMENT UNDER TEST.
4. ALL WIRING UNLESS OTHERWISE SPECIFIED TO BE 0·5MM COLOURS IN BRACKETS TO BE DISREGARDED WHEN LOCAL PLATE WIRING IS USED. ON UNISELR BANKS STRAPPING ON ADJACENT CONTACTS TO BE 0·5MM BTC. NON-ADJACENT CONTACTS TO BE STRAPPED WITH 0·5MM INSULATED WIRE. SCREEN WIRE TO BE 0·5MM COLOURED WHITE.
5. Ø FOR WIRING SEE GBW 11560 OR EQUIV.
6. WHEN EXCH. IS NOT EQUIPPED WITH POS. BATT USE RELAY B1/3 AND ADD WIRING SHOWN IN FIG. 3.
7. TA & PA RELAYS ARE CONNECTED DIFFERENTIALLY.
FOR N.Z. NOTES SEE SHT. 2
PROOF
5F 27-10-83 G.U.J. 38436 AJC GCG NO CHANGE, SHT 1 AMD.
5E 28-5-80 E.U. 163000
ISS DATE DR DC ORDER CKD APPD CHANGE
ROUTINER FOR GROUP SELRS WITHOUT BUSY FLASH
TEST UNIT 2000 TYPE
DRN: T-EQPT CKD: ORIGIN: T-EQPT
TCD: E.U. APPD: STANDARD ATW 22001
NZPO ENG... IN-CHIEF, WELLINGTON
SIZE A1
GBW 11221
UD 237