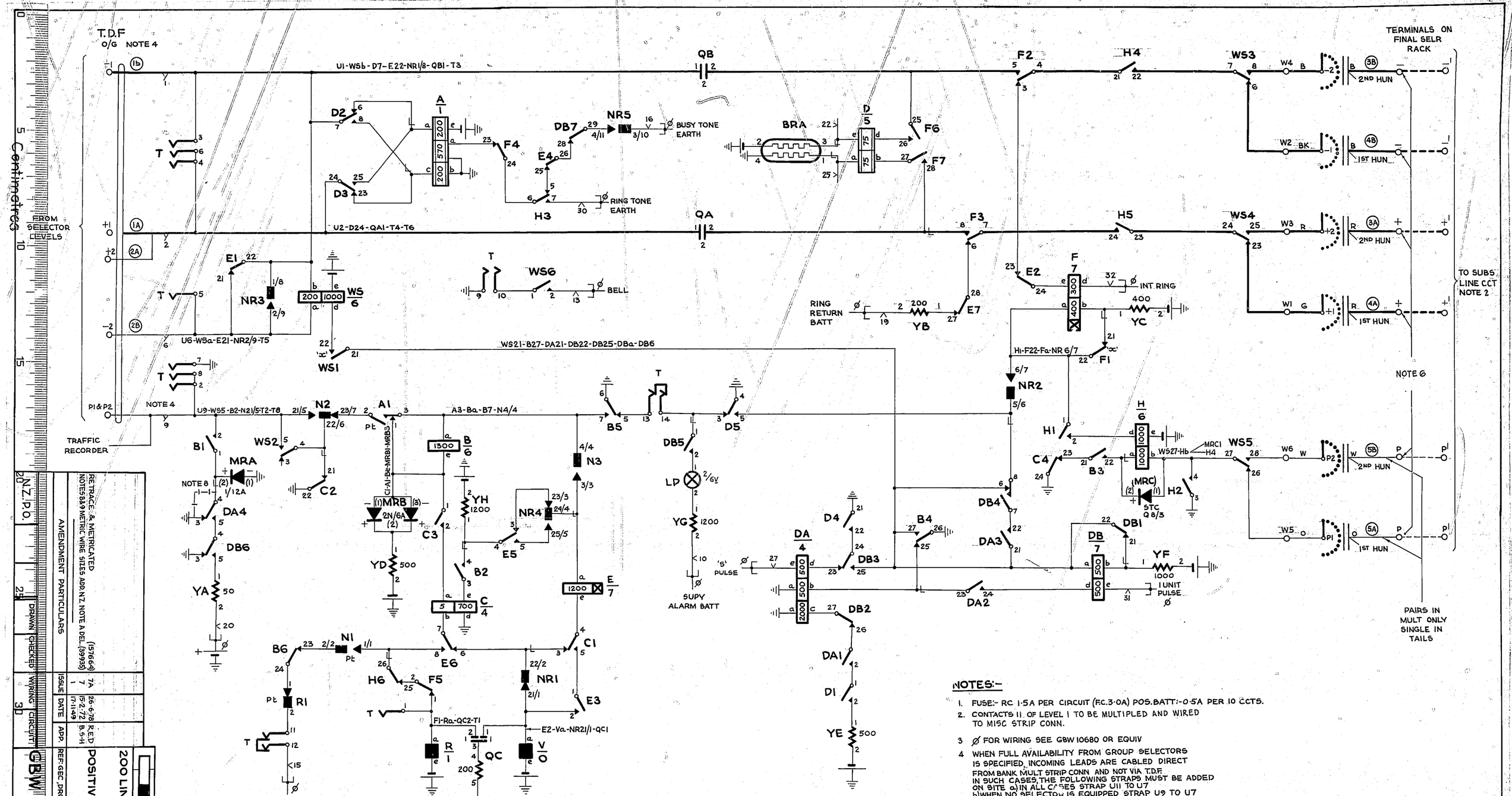

NOTES:-

1. FUSE:- RC 1·5A PER CIRCUIT (F.C.3·0A) POS.BATT:-0·5A PER 10 CCTS.
2. CONTACTS 11 OF LEVEL 1 TO BE MULTIPLED AND WIRED TO MISC STRIP CONN.
3. Ø FOR WIRING SEE GBW 10680 OR EQUIV
4. WHEN FULL AVAILABILITY FROM GROUP SELECTORS IS SPECIFIED, INCOMING LEADS ARE CABLED DIRECT FROM BANK MULT STRIP CONN AND NOT VIA T.D.F. IN SUCH CASES, THE FOLLOWING STRAPS MUST BE ADDED ON SITE a) IN ALL CASES STRAP U11 TO U7 b) WHEN NO SELECTOR IS EQUIPPED STRAP U9 TO U7
5. WHERE ALTERNATIVE MECH SPRINGSET Nos ARE SHOWN i.e 3/4, 21/2 etc., THE Nos BEFORE AND AFTER THE OBLIQUE STROKE APPLY TO TYPE 2 & TYPE 1 SPRING-SETS RESPY NUMBERS WITHOUT AN OBLIQUE STROKE APPLY TO BOTH TYPES OF SPRINGSETS
6. WHEN A CENTRALISED I.D.F. IS SPECIFIED THE -,+& P TERM'LS ON THE BANK MULT. STRIP CONN. ARE CABLED TO I.D.F. MULT.
7. ALL WIRING TO BE 0·5mm UNLESS OTHERWISE SPECIFIED.
8. WHEN LOCAL METERING IS NOT REQUIRED INSERT STRAP AS SHOWN THUS —1—1—
9. ON EARLY EQUIPMENT NEGATIVE & POSITIVE BATT. WIRING WAS BK OR W AND R-B RESPECTIVELY.

BATT:-(W) U12-WSe-He-YD2-YE2-YF2-YC2-Ae-Ve-Re-BRA2-YH2
EARTH:-(R) U11-D21-D4-C22-C24-Cd-H3-Ab-B26-B6-DAa-(DA4)-DA3-DB3-MRA1-BRA4-QC5-T7-T9
POSITIVE BATT (R-B) U20-YA2

N	NR	T
3	5	14

GBW. 10771

RETRACE & METRICATED NOTES 8&9 METRIC WIRE SIZES ADD N.Z. NOTE A DEL. (39935)	(157664)	7A	26-6-78	R.E.D
		7	15-2-72	B.S.H
AMENDMENT PARTICULARS		1	17-11-49	
	ISSUE	DATE	APP.	

DRAWN | CHECKED | WIRING | CIRCUIT

N.Z.P.O.

SLOW RELEASE | SLOW OPERATE

200 LINE FINAL SELECTOR
ORD
POSITIVE BATTERY METERING
2000 TYPE

REF: GEC, DRG S 8562 | SIZE M | SOV H

GBW 10771