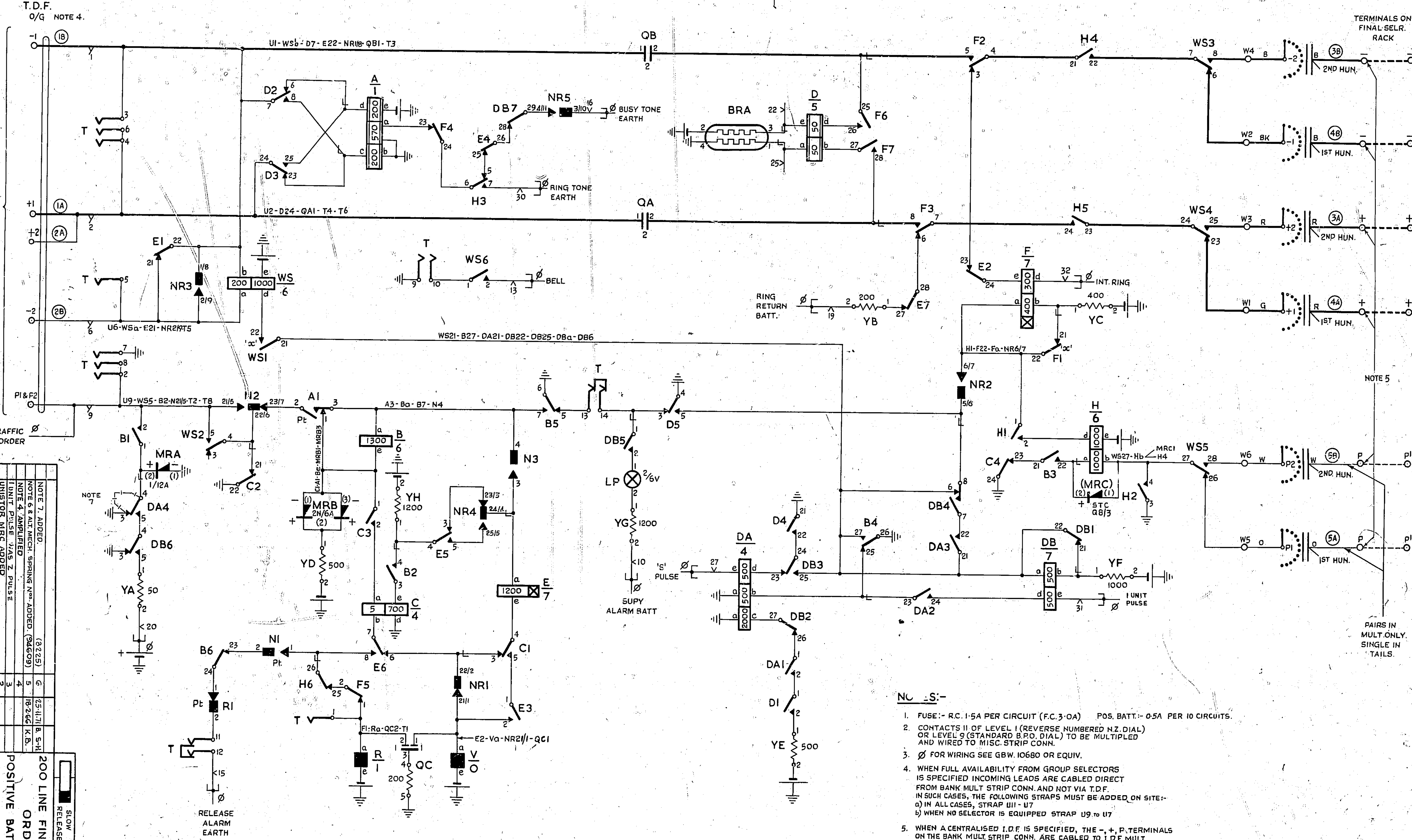

NOTES:-

1. FUSE:- R.C. 1·5A PER CIRCUIT (F.C. 3·0A) POS. BATT.:- 0·5A PER 10 CIRCUITS.
2. CONTACTS 11 OF LEVEL 1 (REVERSE NUMBERED N.Z. DIAL) OR LEVEL 9 (STANDARD B.P.O. DIAL) TO BE MULTIPLED AND WIRED TO MISC. STRIP CONN.
3. Ø FOR WIRING SEE GBW. 10680 OR EQUIV.
4. WHEN FULL AVAILABILITY FROM GROUP SELECTORS IS SPECIFIED INCOMING LEADS ARE CABLED DIRECT FROM BANK MULT STRIP CONN. AND NOT VIA T.D.F. IN SUCH CASES, THE FOLLOWING STRAPS MUST BE ADDED ON SITE:-
   a) IN ALL CASES, STRAP U11 - U7
   b) WHEN NO SELECTOR IS EQUIPPED STRAP U9 TO U7
5. WHEN A CENTRALISED I.D.F. IS SPECIFIED, THE −, +, P TERMINALS ON THE BANK MULT. STRIP CONN. ARE CABLED TO I.D.F. MULT.
6. WHERE ALTERNATIVE MECHANICAL SPRING Nos. ARE SHOWN e.g. 22/2 THE Nos. BEFORE AND AFTER THE OBLIQUE STROKE APPLY TO TYPE 2 AND TYPE 1 SPRINGSETS RESPECTIVELY. Nos WITHOUT AN OBLIQUE STROKE APPLY TO BOTH TYPES OF SPRINGSETS.
7. WHEN LOCAL METERING IS NOT REQUIRED INSERT STRAP SHOWN −I−I−I−

BATT: (W) U12-WSe-He-YD2-YE2-YF2-YC2-Ae-Ve-Re-BRA2-YH2.

EARTH: (R) U11-D21-D4-C22-C24-Cd-H3-Ab-B26-B6-DAa-DA3-DB3-MRA1-BRA4-QC5-T7

POSITIVE BATT. (R-B) U20-YA2.

N	NR	T
3	5	14

SLOW RELEASE / SLOW OPERATE

ISSUE	AMENDMENT PARTICULARS	DATE	APP.
1	UNISTOR MRC ADDED		
2	1 UNIT PULSE VIAS Z PULSE		
3	NOTE 4. AMPLIFIED		
4	NOTE 6 & ALT. MECH. SPRING Nos. ADDED. (94609)	18-2-66	K.B.
5	NOTE 7. ADDED. (8225)	25-11-71	B. S-H.
G			

NZPO

DRAWN B.W.H. | CHECKED | WIRING | CIRCUIT

200 LINE FINAL SELECTOR ORD.
POSITIVE BATTERY METERING.
2000 TYPE.

REF: G.E.C. DRG. S8562

50V | E

GBW. 10770

GBW 10770