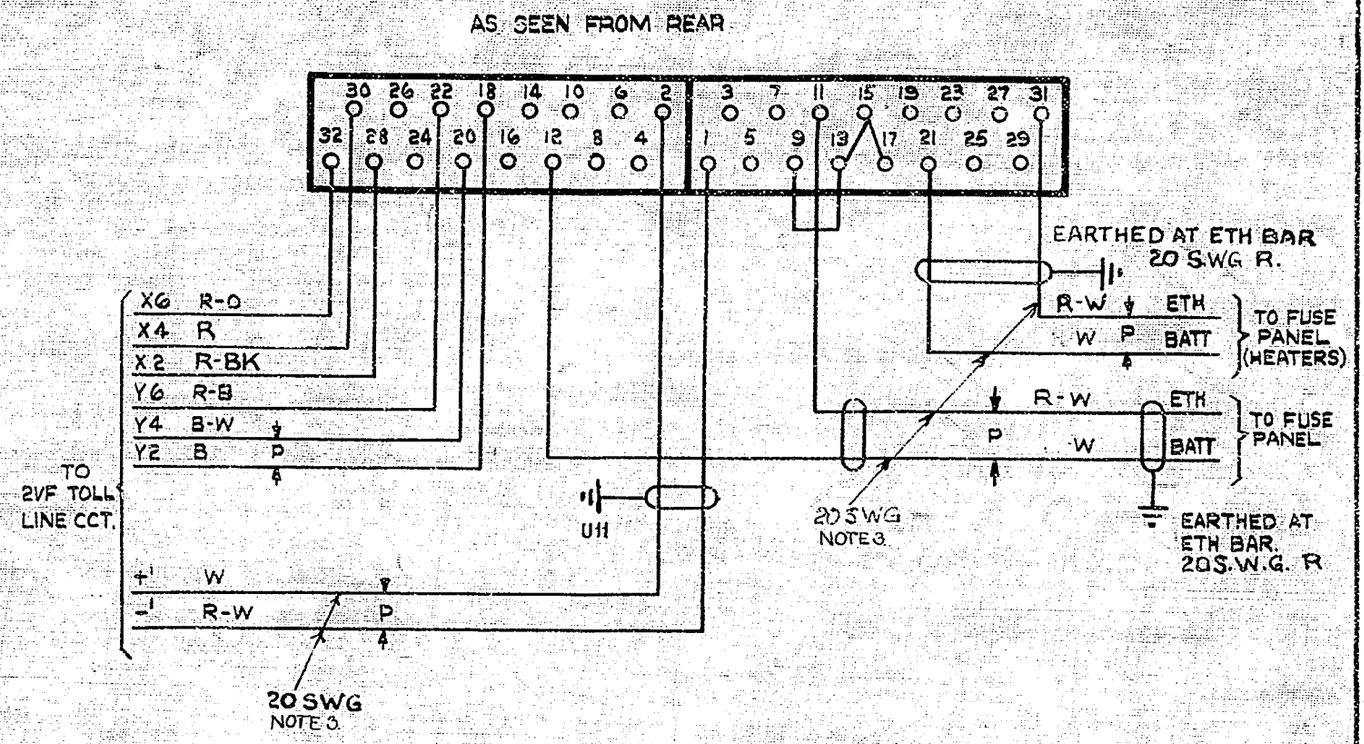

NOTES

1. SCREENED LEADS TO BE EARTHED AT POINTS INDICATED.

2. ALL WIRES NOT OTHERWISE SPECIFIED TO BE 23 SWG.

3. THESE LEADS TO BE RUN ON THE RIGHT HAND SIDE OF RACK (REAR VEIW) ALL OTHER WIRING TO BE RUN ON THE LEFT HAND SIDE.

AMENDMENT PARTICULARS		ISSUE	DATE	APPD
NOTE 3 ADDED	(34052)	2	25.5.55.	[illegible]
	(30448)	1	21-6-54	[illegible]

2 V.F. SIGNALLING RECEIVER

REF. 50V S

GBU 12340

N.Z.P.O	DRAWN	CHECKED	WIRING	CIRCUIT
	C.T.S.	E.J.C.	[illegible]	[illegible]