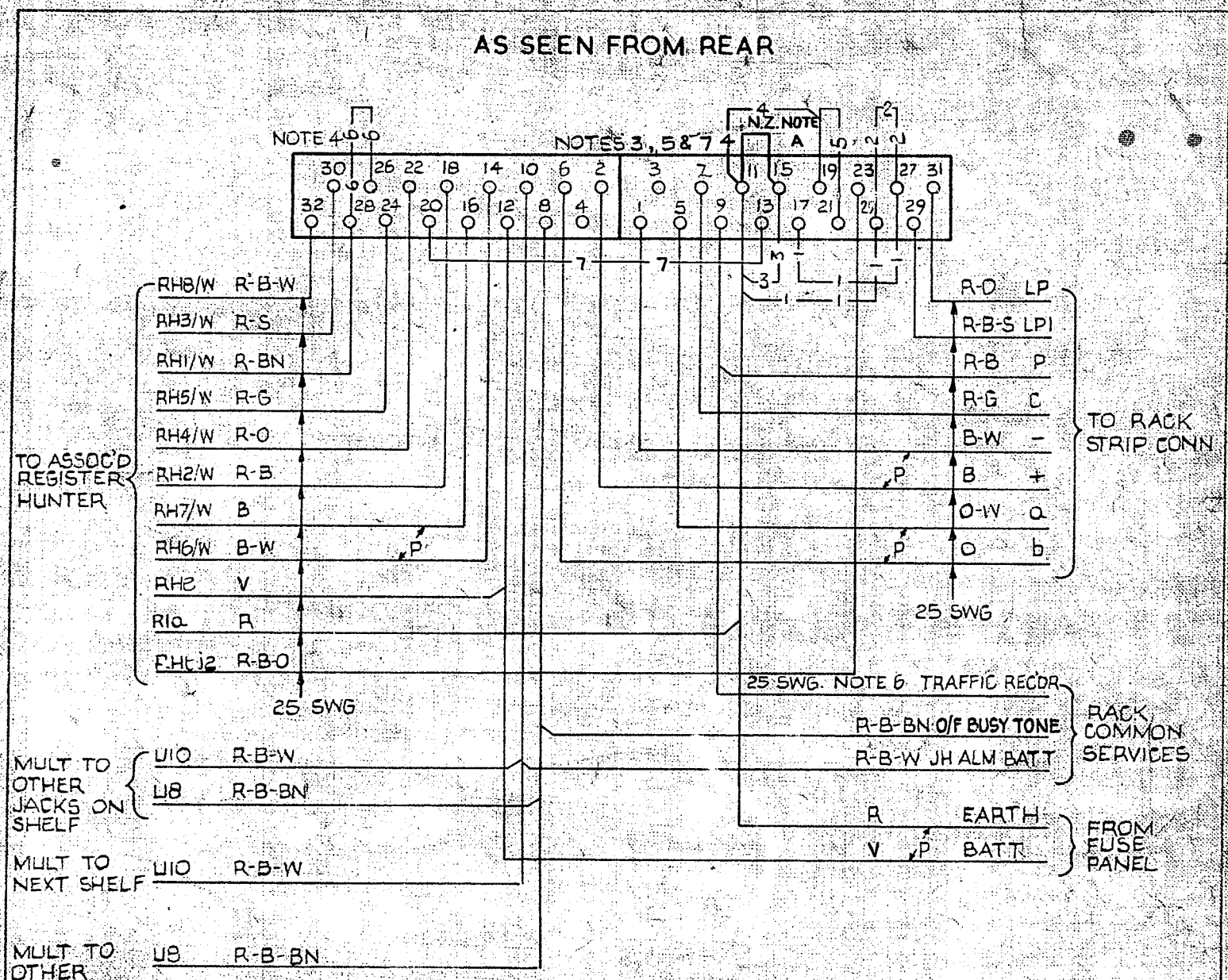

NZ NOTES

A: AT THE WELLESLEY ST. II MAX. STRAP UPT11 TO UPT15 TO BAR ACCESS TO LEVELS 368 & 369.

NOTES

1. ALL WIRING TO BE 22 SWG. UNLESS OTHERWISE SPECIFIED.
2. SHELF JACK U-POINTS 9 & 11 MAKE CONTACT WHEN RELAY SET IS REMOVED.
3. a) STRAP U11-U19 WHEN AN ODD LEVEL SELECTION IS REQUIRED FOR THE THOUSANDS DIGIT OUTSTEP.
   b) STRAP U19-U21 WHEN 7A2 HUNTING CONTROL IS REQUIRED.
   c) STRAP U11-U15 WHEN SPECIAL SERVICES SELECTION IS REQUIRED (SEE ALSO N.Z. NOTE A).
4. WHEN REGISTER PRE-SELECTIO[illegible] FEATURE IS NOT REQUIRED DELETE STRAP BETWEEN U26 & U28 SHOWN — 6 — 6 —
5. WHEN CONNECTED TO A 2-WIRE ROTARY GROUP SELR ADD STRAP U25-U27 SHOWN — 2 — 2 —
   — " — 1 — 1 — " " 3-WIRE " " " " STRAPS U25-U11 & U27-U17 SHOWN
6. COLOURS FOR TRAFFIC RECORDER LEADS:- SHELVES A & B R-O; SHELVES C & D R-G; SHELVES E & F R-BN.
7. STRAP U13-U20 AS SHOWN — 7 — 7 — WHEN RELAY SET IS ASSOCIATED ONLY WITH THE TOLL SWITCHING TRAIN AND MANUAL HOLD FACILITY IS REQUIRED.
8. ON SOME EARLY EQUIPMENT BATTERY WIRING IS BK.

AMENDMENT PARTICULARS	ISSUE	DATE	APP'D
O/F BUSY TONE WAS N.U. TONE. NOTE 8 ADDED (86252)	3	18·8·69	[illegible]
N.Z. NOTE A REFERENCE ADDED. (7756)	2A	31·1·69	[illegible]
NOTE 7 AND ASSOCIATED CONNECTION ADDED (72824)	2	2·6·67	[illegible]
(72204)	1	5·2·64	[illegible]

INTERWORKING RELAY SET (TYPE SR4)

STEP BY STEP TO ROTARY 4 SELECTION

SOV | E

N.Z.P.O. | DRAWN | CHECKED | WIRING / CIRCUIT

GBU 11151